Wireless telegram Build up

This chapter covers the wireless M-Bus implementation and wired M-Bus implementation of the telegrams. The M-Bus implementation is according to the new M-Bus standard EN13757-2, EN13757-3, EN13757-4 (2011) and the OMS specification.

This short instruction is an extraction from the CMeX50 Manual.

Wireless telegram Build up 1
Telegram handling 2
Container 2
Wireless M-Bus telegram with no header 2
Wireless M-Bus telegram with short header 3
Wireless M-Bus telegram with long header 3
Wireless M-Bus telegrams contained in wired M-Bus container 4
Document History 4

Telegram handling

All telegrams from wireless M-Bus slaves are handled but are handled differently depending on contents. If a telegram is encrypted or the C and CI-fields are unknown to the product, the telegram is always stored and available as container telegrams on the wired M-Bus interface.

Container

The DIF/VIF Container description is identified by the following DIF/VIF data:

0x0D 0xFD 0x3B 0xnn

where 0xnn is the length of the complete wireless M-Bus telegram (length of the container).

Wireless M-Bus telegram with no header

Figure 1 describes how data is mapped from the received wireless M-Bus telegram to the wired M-Bus telegram. The wired secondary address is taken from the M-Field and A-Field from the wireless M-Bus telegram. The wired A-Field is automatically assigned upon installation.

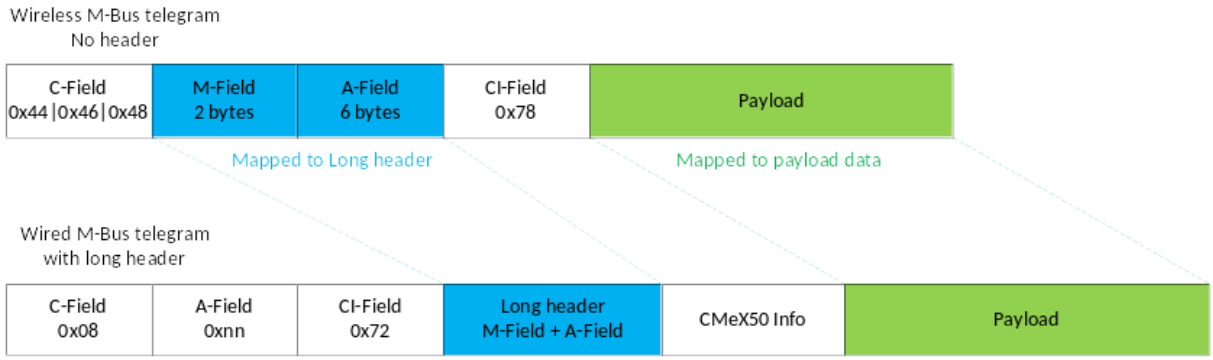

Figure 1 Wireless M-Bus telegram with no header data mapping

Wireless M-Bus telegram with short header

Figure 2 describes how data is mapped from the received wireless M-Bus telegram to the wired M-Bus telegram. The wired secondary address is taken from the M-Field and A-Field from the wireless M-Bus telegram. The wired A-Field is automatically assigned upon installation. The short header information received in the wireless M-Bus telegram is not used on the wired M-Bus interface.

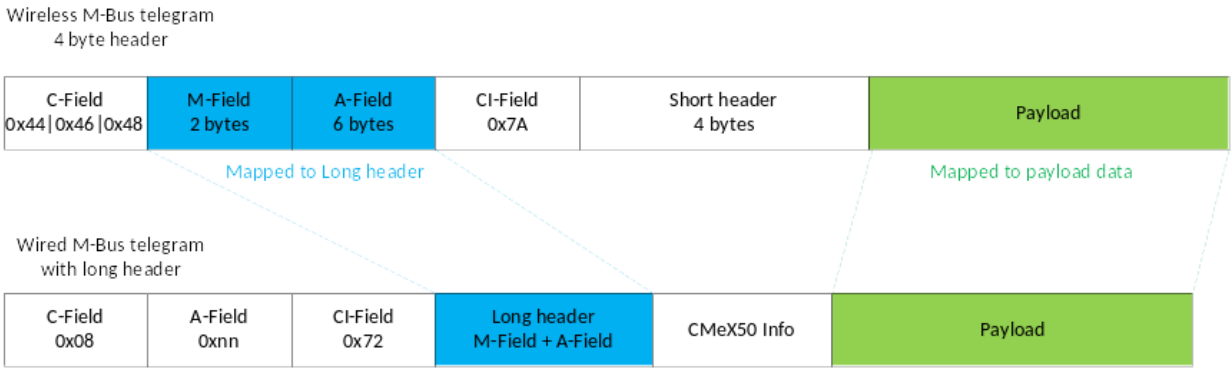

Figure 2 Wireless M-Bus telegram with short header data mapping

Example:
08057203690068961 51f1bcc0000000c78756600640275000001fd71200dfd3b2f2e449615036900681f1b7a54002025769205adb29bd8b1de2349c88dc1cc091c4d02a7941bc27dc96c1ea285ef6d4f0f

Wireless M-Bus telegram with long header

Figure 3 describes how data is mapped from the received wireless M-Bus telegram to the wired M-Bus telegram. The wired secondary address is taken from the long header from the wireless M-Bus telegram. The wired A-Field is automatically assigned upon installation.

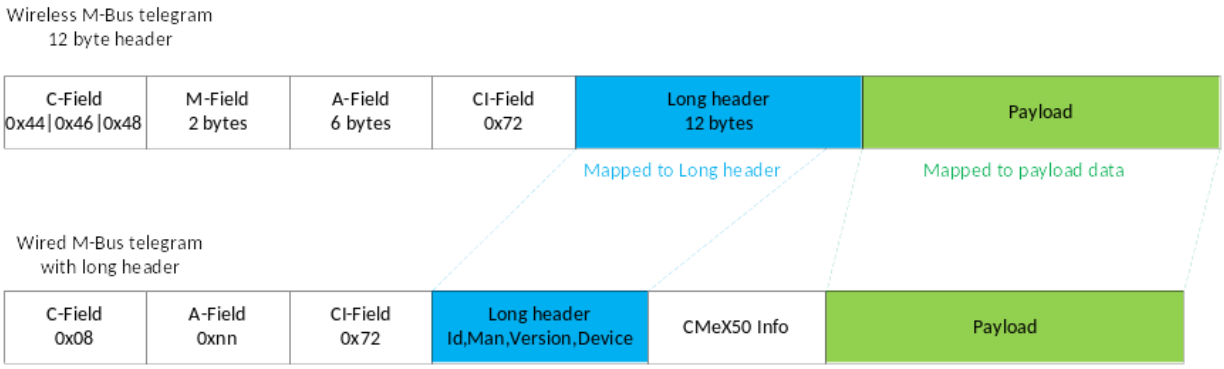

Figure 3 Wireless M-Bus telegram with long header data mapping

Wireless M-Bus telegrams contained in wired M-Bus container

The wireless M-Bus telegram will be placed in an M-Bus container if one or more of the following criteria are met:

1. C- and CI-Field are unknown to the product
2. The wireless M-Bus telegram is encrypted, and no key is set
3. The wireless M-Bus telegram is encrypted, private or global key is set, but encryption mode is set to “None”
4. The wireless M-Bus telegram is encrypted, wrong key or wrong encryption mode is set
5. The global setting for wired mode is set to “Container”

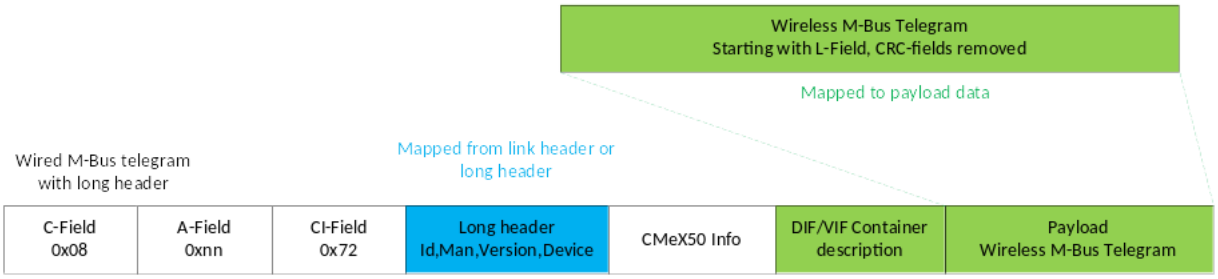

Figure 4 Wireless M-Bus telegram container data mapping

Document History

Version	Date	Description	Author
1.0	2021-13-09	First Release	Tobias Svensson